AC GearMotors

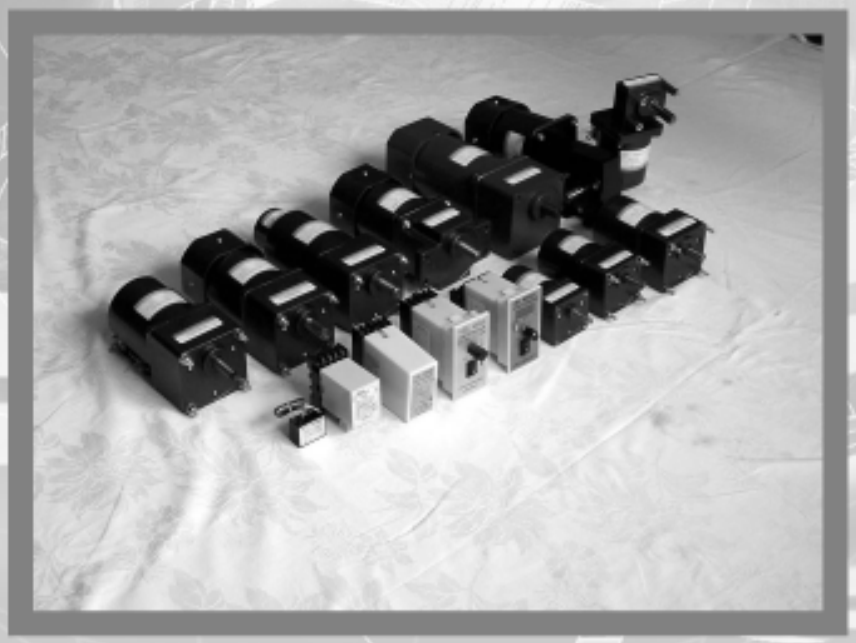

Anaheim Automation 910 E. Orangefair Ln. Anaheim, CA 92801 Tel 800-345-9401 Fax (714)992-0471
for more information visit www.anaheimautomation.com

AC GEARMOTR

Indications of the model number

◆ Motor

90 YY 60 - 2

Output power:
4、15、25
40、60、90、120W

Motor type:
YY: induction motor
YN: reversible motor

Frame size:
Φ60mm
Φ70mm
Φ80mm
Φ90mm
Φ100mm

Voltage:
1:110V4P 2:220V4P
3:110V2P 4:220V2P
5:36V4P 6:36V2P
7:24V4P 8:24V2P

◆ Wiring diagram

Model YY single phase induction motor

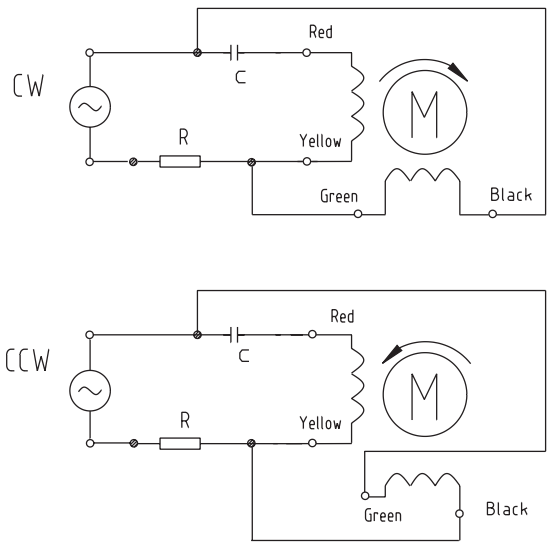

Model YN single phase reversible motor

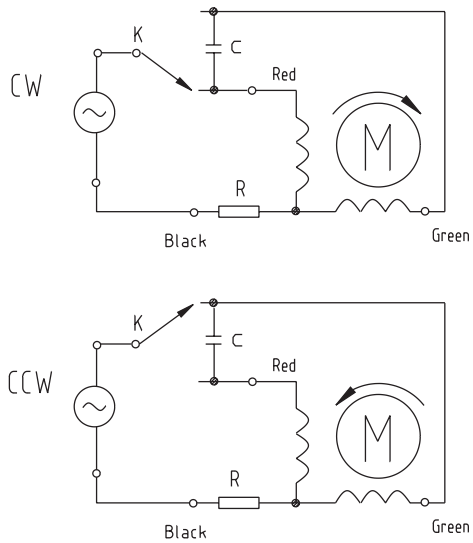

Note£l1. C indicate split capacitance.
2. R indicate thermal protector. Cut-off temperatur:125°C ± 5°C, recover temperature:105°C.

Anaheim Automation 910 E. Orangefair Ln. Anaheim, CA 92801 Tel 800-345-9401 Fax (714)992-0471
for more information visit www.anaheimautomation.com

AC GEARMOTR

YY Series Induction gearmotor

YN Series Reversible gearmotor

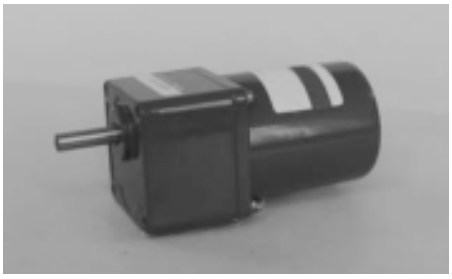

◆ Motor technical data

Type	Power W	Voltage V	Frequency Hz	Current A	Starting torque N.m	Rated torque N.m	Rated speed r/min	capacitor uF/VAC	operating mode
60YY6-2	6	220	50	0.10	0.045	0.046	1250	0.8/450	Cont
60YN6-2				0.11	0.055	0.049	1250	1.0/450	30min
60YY6-1	6	110	50	0.20	0.045	0.046	1250	2.5/250	Cont
60YN6-1			60	0.18	0.045	0.038	1250	2.5/250	Cont

Permissible load of gearmotor

50Hz N.m

Ratio	3	5	7.5	10	12.5	15	20	25	30	40	50	75	100	150
Speed rpm	500	300	200	150	120	100	75	60	50	37	30	20	15	10
Number of gear trains	2	2	2	2	2	3	3	3	3	3	3	4	4	4
(N.m)	0.11	0.18	0.28	0.37	0.46	0.67	0.67	0.83	1.00	1.34	1.68	2.24	2.50	2.50

60Hz N.m

Ratio	3.6	6	9	10	15	18	20	30	36	40	60	90	120	180
Speed rpm	500	300	200	180	120	100	90	60	50	45	30	20	15	10
Number of gear trains	2	2	2	2	2	3	3	3	3	3	4	4	4	4
(N.m)	0.11	0.18	0.28	0.31	0.46	0.50	0.55	0.83	1.00	1.10	1.50	2.24	2.50	2.50

◆ Dimensions

RATIO	L1 (mm)	L (mm)
3~15	32	107
18~180	42	117

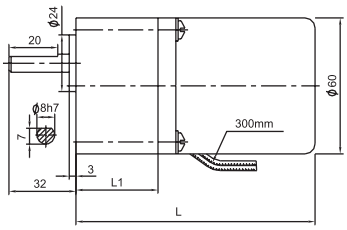

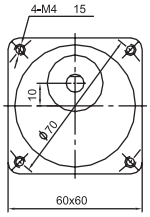

Anaheim Automation 910 E. Orangefair Ln. Anaheim, CA 92801 Tel 800-345-9401 Fax (714)992-0471
for more information visit www.anaheimautomation.com

AC GEARMOTR

YY Series Induction gearmotor

YN Series Reversible gearmotor

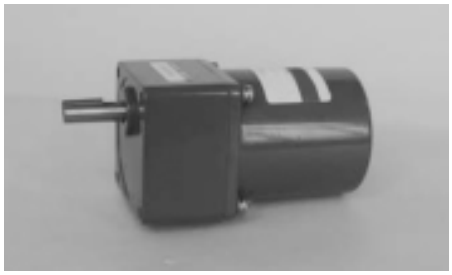

◆ Motor technical data

Type	Power W	Voltage V	Frequency Hz	Current A	Starting torque N.m	Rated torque N.m	Rated speed r/min	capacitor uF/VAC	operating mode
70YY15-2	15	220	50	0.17	0.090	0.115	1250	1.2/450	Cont
70YN15-2				0.18	0.100	0.120	1250	1.5/450	30min
70YY15-1	15	110	50	0.35	0.090	0.115	1250	5/250	Cont
70YN15-1			60	0.34	0.090	0.096	1250	5/250	Cont

Permissible load of gearmotor

50Hz **N.m**

Ratio	3	5	7.5	10	12.5	15	20	25	30	40	50	75	100	150
Speed rpm	500	300	200	150	120	100	75	60	50	37	30	20	15	10
Number of gear trains	2	2	2	2	2	3	3	3	3	3	3	4	4	4
(N.m)	0.28	0.47	0.70	0.93	1.16	1.26	1.68	2.10	2.51	3.35	4.19	5	5	5

60Hz **N.m**

Ratio	3.6	6	9	10	15	18	20	30	36	40	60	90	120	180
Speed rpm	500	300	200	180	120	100	90	60	50	45	30	20	15	10
Number of gear trains	2	2	2	2	2	3	3	3	3	3	4	4	4	4
(N.m)	0.28	0.47	0.70	0.78	1.05	1.26	1.40	2.10	2.51	2.79	3.77	5	5	5

◆ Dimensions

RATIO	L1 (mm)	L (mm)
3~15	32	112
18~180	42	122

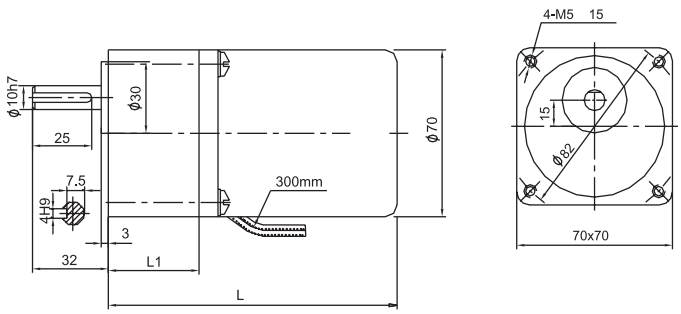

Anaheim Automation 910 E. Orangefair Ln. Anaheim, CA 92801 Tel 800-345-9401 Fax (714)992-0471
for more information visit www.anaheimautomation.com

AC GEARMOTR

YY Series Induction gearmotor

YN Series Reversible gearmotor

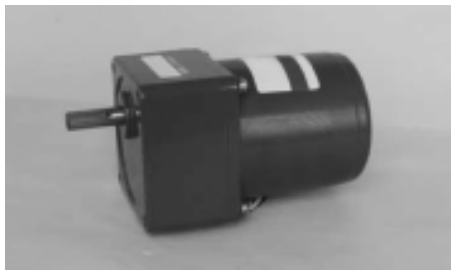

◆ Motor technical data

Type	Power W	Voltage V	Frequency Hz	Current A	Starting torque N.m	Rated torque N.m	Rated speed r/min	capacitor uF/VAC	operating mode
80YY25-2	25	220	50	0.27	0.140	0.191	1250	1.5/450	Cont
80YN25-2				0.29	0.142	0.192	1250	2.2/450	30min
80YY25-1	25	110	50	0.50	0.140	0.191	1250	6/250	Cont
80YN25-1			60	0.48	0.140	0.159	1500	6/250	Cont

Permissible load of gearmotor

50Hz N.m

Ratio	3	5	7.5	10	12.5	15	20	25	30	40	50	75	100	150
Speed rpm	500	300	200	150	120	100	75	60	50	37	30	20	15	10
Number of gear trains	2	2	2	2	2	3	3	3	3	3	3	4	4	4
(N.m)	0.46	0.77	1.16	1.55	1.93	2.32	3.09	3.48	4.17	5.57	6.96	8	8	8

60Hz N.m

Ratio	3.6	6	9	10	15	18	20	30	36	40	60	90	120	180
Speed rpm	500	300	200	180	120	100	90	60	50	45	30	20	15	10
Number of gear trains	2	2	2	2	2	3	3	3	3	3	4	4	4	4
(N.m)	0.46	0.77	1.16	1.29	1.93	2.32	2.58	3.48	4.17	4.64	6.26	8	8	8

◆ Dimensions

RATIO	L1 (mm)	L (mm)
3~15	32	117
18~180	44	129

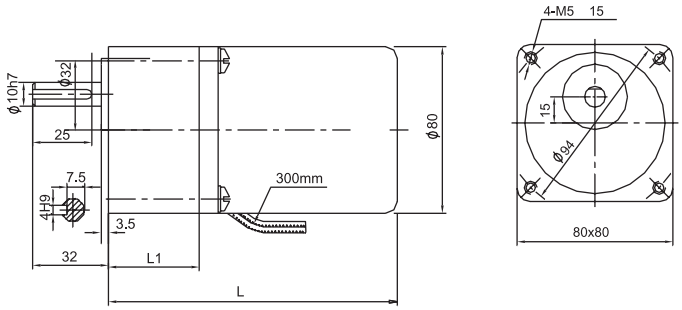

Anaheim Automation 910 E. Orangefair Ln. Anaheim, CA 92801 Tel 800-345-9401 Fax (714)992-0471
for more information visit www.anaheimautomation.com

AC GEARMOTR

YY Series Induction gearmotor

YN Series Reversible gearmotor

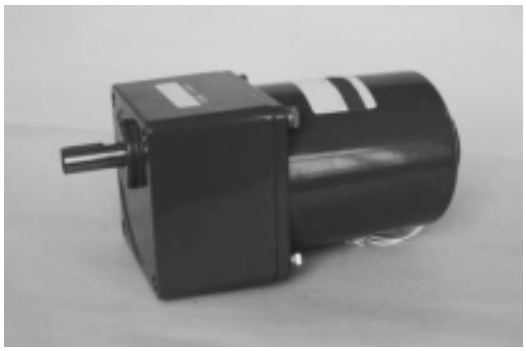

◆ Motor technical data

Type	Power W	Voltage V	Frequency Hz	Current A	Starting torque N.m	Rated torque N.m	Rated speed r/min	capacitor uF/VAC	operating mode
90YY40-2	40	220	50	0.35	0.220	0.294	1300	2.5/450	Cont
90YN40-2				0.36	0.250	0.300	1300	3.0/450	30min
90YY40-1	40	110	50	0.70	0.220	0.294	1300	10/250	Cont
90YN40-1			60	0.68	0.220	0.247	1550	10/250	Cont

Permissible load of gearmotor

50Hz **N.m**

Ratio	3	5	7.5	10	12.5	15	20	25	30	40	50	75	100	150
Speed rpm	500	300	200	150	120	100	75	60	50	37	30	20	15	10
Number of gear trains	2	2	2	2	2	2	3	3	3	3	3	3	4	4
(N.m)	0.71	1.19	1.78	2.38	2.97	3.57	4.29	5.36	6.43	8.57	10	10	10	10

60Hz **N.m**

Ratio	3.6	6	9	10	15	18	20	30	36	40	60	90	120	180
Speed rpm	500	300	200	180	120	100	90	60	50	45	30	20	15	10
Number of gear trains	2	2	2	2	2	3	3	3	3	3	3	4	4	4
(N.m)	0.71	1.19	1.78	2.00	2.97	3.24	3.60	5.36	6.43	7.20	10	10	10	10

◆ Dimensions

RATIO	L1 (mm)	L (mm)
3~15	45	150
18~180	60	165

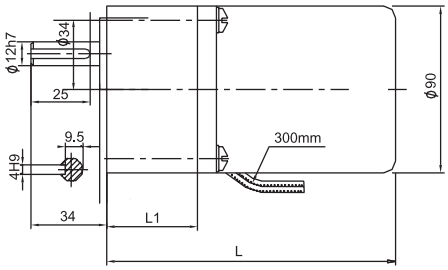

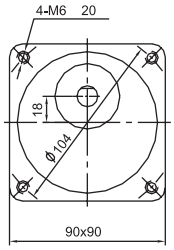

Anaheim Automation 910 E. Orangefair Ln. Anaheim, CA 92801 Tel 800-345-9401 Fax (714)992-0471
for more information visit www.anaheimautomation.com

AC GEARMOTR

YY Series Induction gearmotor

YN Series Reversible gearmotor

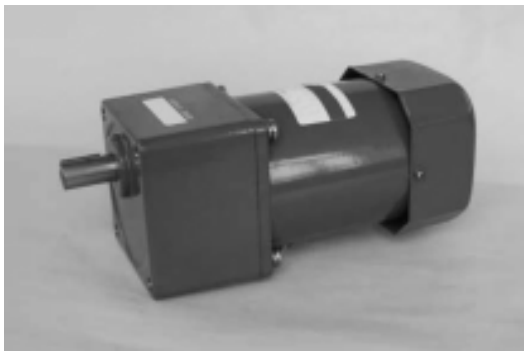

◆ Motor technical data

Type	Power W	Voltage V	Frequency Hz	Current A	Starting torque N.m	Rated torque N.m	Rated speed r/min	capacitor uF/VAC	operating mode
90YY60-2F	60	220	50	0.50	0.340	0.441	1300	3.5/450	Cont
90YN60-2F				0.52	0.360	0.450	1300	4.5/450	30min
90YY60-1F	60	110	50	1.00	0.340	0.441	1300	15/250	Cont
90YN60-1F			60	1.00	0.340	0.370	1550	15/250	Cont

Permissible load of gearmotor

50Hz **N.m**

Ratio	3	5	7.5	10	12.5	15	20	25	30	40	50	75	100	150
Speed rpm	500	300	200	150	120	100	75	60	50	37	30	20	15	10
Number of gear trains	2	2	2	2	2	3	3	3	3	3	3	3	4	4
(N.m)	1.07	1.78	2.68	3.57	4.46	5.36	7.14	8.04	9.64	12.86	16.07	20	20	20

60Hz **N.m**

Ratio	3.6	6	9	10	15	18	20	30	36	40	60	90	120	180
Speed rpm	500	300	200	180	120	100	90	60	50	45	30	20	15	10
Number of gear trains	2	2	2	2	2	3	3	3	3	3	4	4	4	4
(N.m)	1.07	1.78	2.68	3.00	4.46	5.36	6.00	8.04	9.64	10.80	16.07	20	20	20

◆ Dimensions

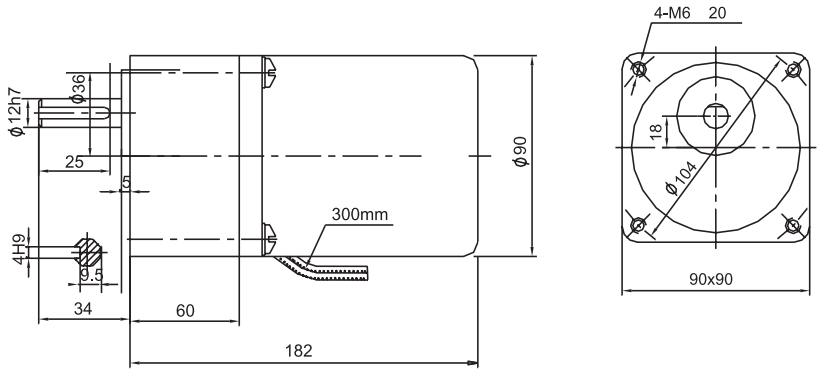

Anaheim Automation 910 E. Orangefair Ln. Anaheim, CA 92801 Tel 800-345-9401 Fax (714)992-0471
for more information visit www.anaheimautomation.com

AC GEARMOTR

YY Series Induction gearmotor

YN Series Reversible gearmotor

◆ Motor technical data

Type	Power W	Voltage V	Frequency Hz	Current A	Starting torque N.m	Rated torque N.m	Rated speed r/min	capacitor uF/VAC	operating mode
90YY90-2F	90	220	50	0.70	0.470	0.661	1300	5/450	Cont
90YN90-2F				0.72	0.540	0.675	1300	6/450	30min
90YY90-1F	90	110	50	1.45	0.470	0.661	1300	25/250	Cont
90YN90-1F			60	1.40	0.470	0.554	1550	25/250	Cont

Permissible load of gearmotor

50Hz **N.m**

Ratio	3	5	7.5	10	12.5	15	20	25	30	40	50	75	100	150
Speed rpm	500	300	200	150	120	100	75	60	50	37	30	20	15	10
Number of gear trains	2	2	2	2	2	3	3	3	3	3	3	4	4	4
(N.m)	1.60	2.68	4.01	5.35	6.69	7.23	9.64	12.05	14.46	19.27	24.04	30	30	30

60Hz **N.m**

Ratio	3.6	6	9	10	15	18	20	30	36	40	60	90	120	180
Speed rpm	500	300	200	180	120	100	90	60	50	45	30	20	15	10
Number of gear trains	2	2	2	2	3	3	3	3	3	3	4	4	4	4
(N.m)	1.60	2.68	4.01	4.49	6.06	7.23	8.08	12.05	14.46	16.15	21.80	30	30	30

◆ Dimensions

Matched F-type reducer

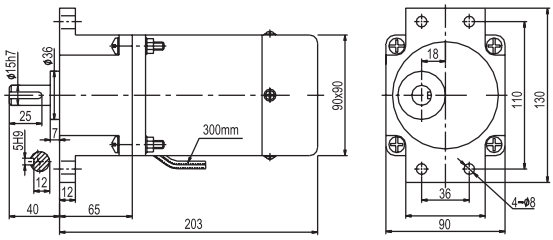

Matched E-type reducer

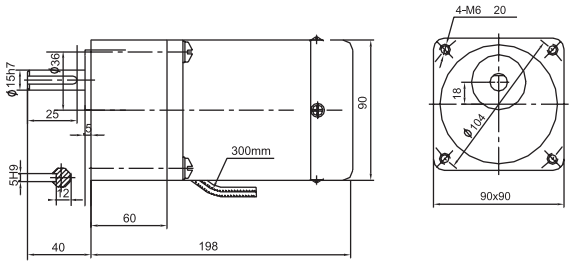

Anaheim Automation 910 E. Orangefair Ln. Anaheim, CA 92801 Tel 800-345-9401 Fax (714)992-0471
for more information visit www.anaheimautomation.com

AC GEARMOTR

YY Series Induction gearmotor

YN Series Reversible gearmotor

◆ Motor technical data

Type	Power W	Voltage V	Frequency Hz	Current A	Starting torque N.m	Rated speed N.m	Rated speed r/min	capacitor uF/VAC	operating mode
100YY120-2F	120	220	50	0.95	0.720	0.882	1300	8/450	Cont
100YN120-2F				0.95	0.720	0.882	1300	8/450	Cont
100YY120-1F	120	110	50	2.10	0.720	0.882	1300	30/250	Cont
100YN120-1F			60	2.10	0.720	0.740	1550	30/250	Cont
100YY140-2F	140	220	50	1.05	0.760	1.029	1300	8/450	Cont
100YN140-2F				1.05	0.760	1.029	1300	8/450	Cont
100YY140-1F	140	110	50	2.30	0.760	1.029	1300	30/250	Cont
100YN140-1F			60	2.30	0.760	0.863	1550	30/250	Cont

Permissible load of gearmotor

120W N.m

50Hz	Ratio	3	5	7.5	10	12.5	15	20	25	30	40	50	75	100	150
	Speed (rpm)	500	300	200	150	120	100	75	60	50	37	30	20	15	10
	(N.m)	2.14	3.57	5.36	7.14	8.93	10.71	12.86	16.07	19.29	25.72	32.15	40	40	40
60Hz	Ratio	3.6	6	9	10	15	18	20	30	36	40	60	90	120	180
	Speed (rpm)	500	300	200	180	120	100	90	60	50	45	30	20	15	10
	(N.m)	2.14	3.57	5.36	5.99	8.93	9.71	10.79	16.07	19.29	21.57	29.35	40	40	40

140W N.m

50Hz	Ratio	3	5	7.5	10	12.5	15	20	25	30	40	50	75	100	150
	Speed (rpm)	500	300	200	150	120	100	75	60	50	37	30	20	15	10
	(N.m)	2.50	4.17	6.25	8.33	10.42	12.50	15.00	18.75	22.50	30.00	37.51	40	40	40
60Hz	Ratio	3.6	6	9	10	15	18	20	30	36	40	60	90	120	180
	Speed (rpm)	500	300	200	180	120	100	90	60	50	45	30	20	15	10
	(N.m)	2.50	4.17	6.25	6.99	10.42	11.32	12.58	18.75	22.50	25.16	33.97	40	40	40

◆ Dimensions

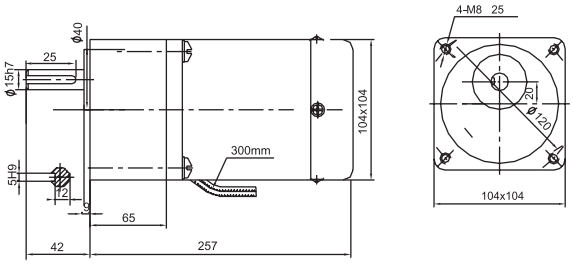

Anaheim Automation 910 E. Orangefair Ln. Anaheim, CA 92801 Tel 800-345-9401 Fax (714)992-0471
for more information visit www.anaheimautomation.com

AC GEARMOTR

Reversible worm gearmotor

◆ Specifications of worm gearmotors

50Hz

Type	Power W	1:50		1:40		1:32		1:25		1:16		1:12.5		oper-ating mode
		rpm	N.m	rpm	N.m	rpm	N.m	rpm	N.m	rpm	N.m	rpm	N.m	
90YN40-2	40	26	7.8	32	6.2	40	5.0	52	3.9	81	2.5	104	2.0	Cont
90YN60-2F	60	26	9.1	32	7.3	40	5.8	52	4.5	81	2.9	104	2.3	30min
90YN90-2F	90	26	15.6	32	12.4	40	10.0	52	7.8	8	5.0	104	4.0	30min

60Hz

Type	Power W	1:50		1:40		1:32		1:25		1:16		1:12.5		oper-ating mode
		rpm	N.m	rpm	N.m	rpm	N.m	rpm	N.m	rpm	N.m	rpm	N.m	
90YN40-2	40	31	6.5	38	5.2	48	4.2	62	3.3	97	2.1	125	1.7	Cont
90YN60-2F	60	31	7.6	38	6.1	48	4.8	62	3.8	97	2.4	125	1.9	30min
90YN90-2F	90	31	13.0	38	10.3	48	8.3	62	6.5	97	4.2	125	3.3	30min

◆ Dimensions

MATCHED FOR 40W MOTOR

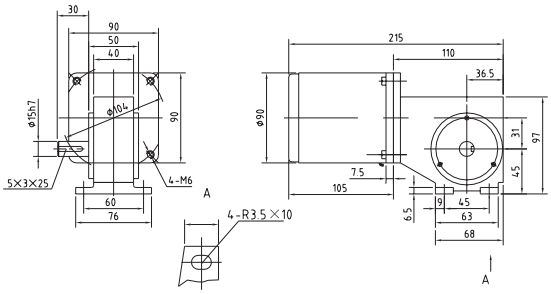

MATCHED FOR 60W & 90W MOTOR

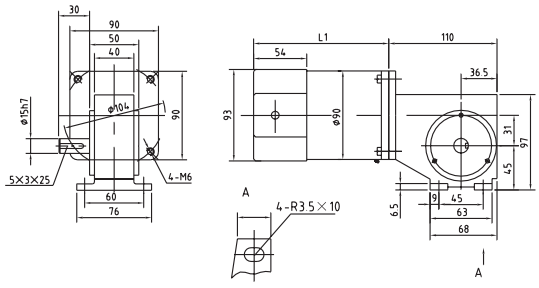

POWER	L1 (mm)
60W	122
90W	137

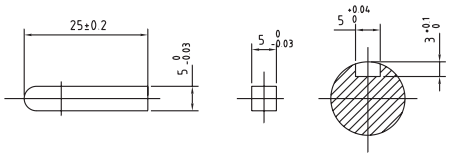

Anaheim Automation 910 E. Orangefair Ln. Anaheim, CA 92801 Tel 800-345-9401 Fax (714)992-0471
for more information visit www.anaheimautomation.com