BDPG-60-110 Series Planetary Gearmotor

- **DC Brush Planetary GearMotor**
- **Value Line - designed for high quality and a low price**
- **Perfect for OEM applications**
- **Up to 4166 oz-in (300 kg-cm) of Continuous Torque**
- **60 mm motor body diameter**
- **Custom versions are available for orders over 100 pieces**

BDPG-60-110-24V-2000-Rxx Specifications

Gear Ratio **Rxx**	3.6	4.25	13	15	18	47	55	65	76	168	198	234	276	326
Length (L) (in)	1.79	1.79	1.79	1.79	1.79	2.22	2.22	2.22	2.22	3.01	3.01	3.01	3.01	3.01
No Load Speed (RPM)	555	470	154	133	111	42	36	30	26	12	10	8.5	7.2	6.1
Rated Speed (RPM)	460	365	119	103	86	33	28	24	20	9.2	7.8	6.6	5.6	4.7
Rated Torque (kg-cm)	4.3	5.0	14	17	20	50	58	73	81	170	200	237	279	300
Peak Torque (kg-cm)	30	30	100	100	100	300	300	300	300	600	600	600	600	600

BDPG-60-110-24V-3000-Rxx Specifications

Gear Ratio **Rxx**	3.6	4.25	13	15	18	47	55	65	76	168	198	234	276	326
Length (L) (in)	1.79	1.79	1.79	1.79	1.79	2.22	2.22	2.22	2.22	3.01	3.01	3.01	3.01	3.01
No Load Speed (RPM)	833	706	230	200	167	64	54	46	39	18	15	13	11	9.2
Rated Speed (RPM)	694	588	192	167	139	53	45	38	33	15	12	10	9.0	7.7
Rated Torque (kg-cm)	4.1	4.8	14	16	19	48	56	66	77	163	192	227	268	300
Peak Torque (kg-cm)	30	30	100	100	100	300	300	300	300	600	600	600	600	600

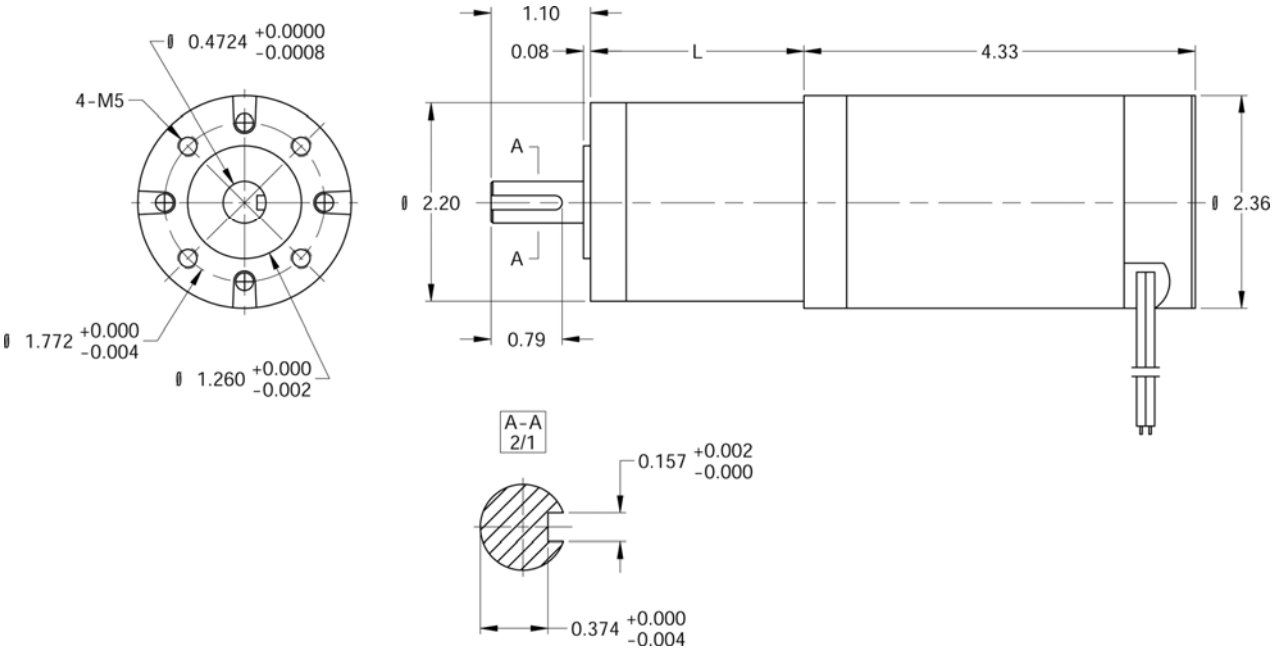

910 E. Orangefair Ln. Anaheim, CA 92801 Tel (714) 992-6990 Fax (714) 992-0471
www.anaheimautomation.com