PKG-231-DPY50-CBL

System Diagram and Specifications

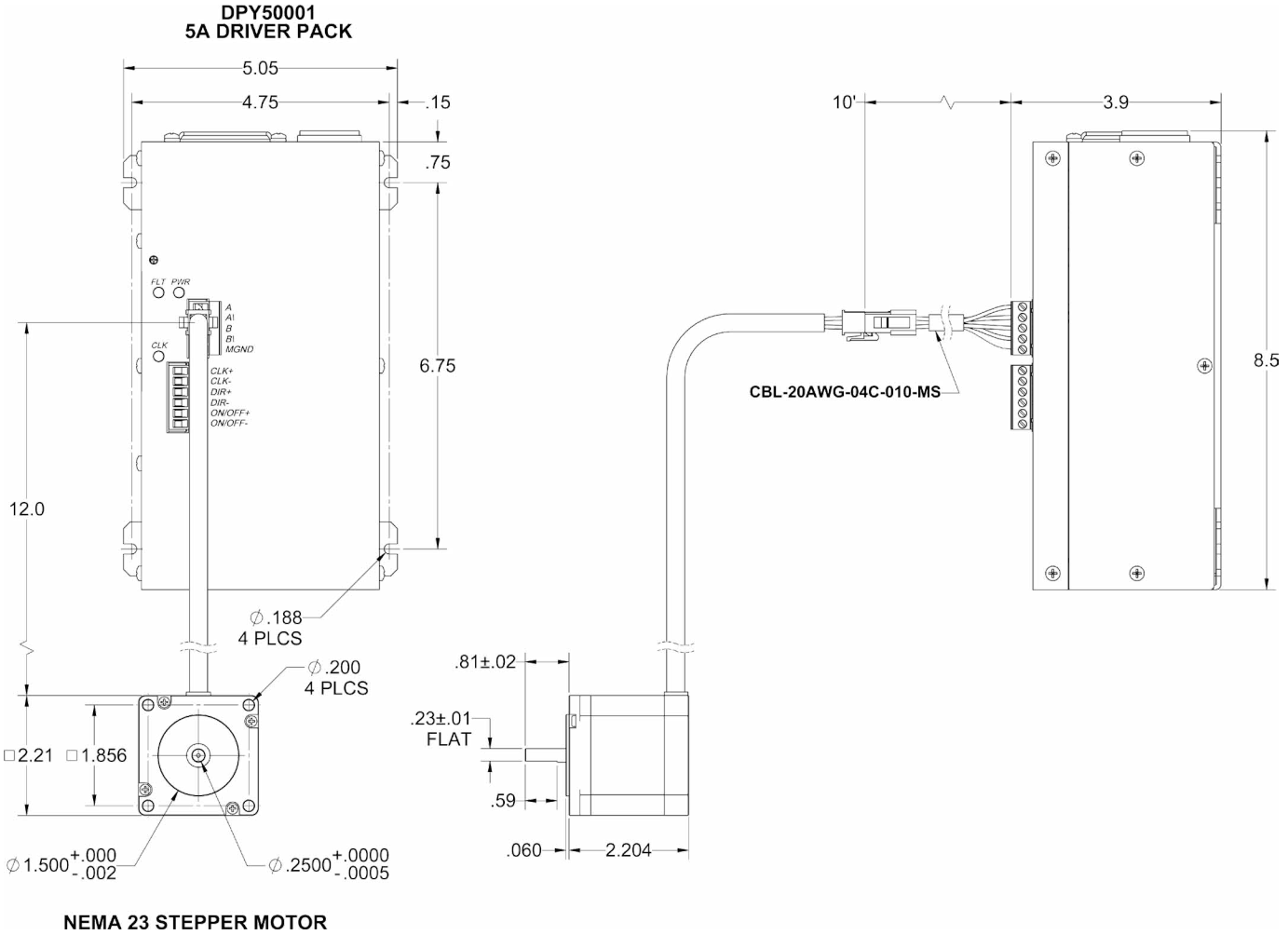

Included Components:	
23Y104S-LW8-MS	Stepper Motor
DPY50001	5Amp Driver Pack with Programmable Indexer
CBL-20AWG-04C-010-MS	Motor Cable

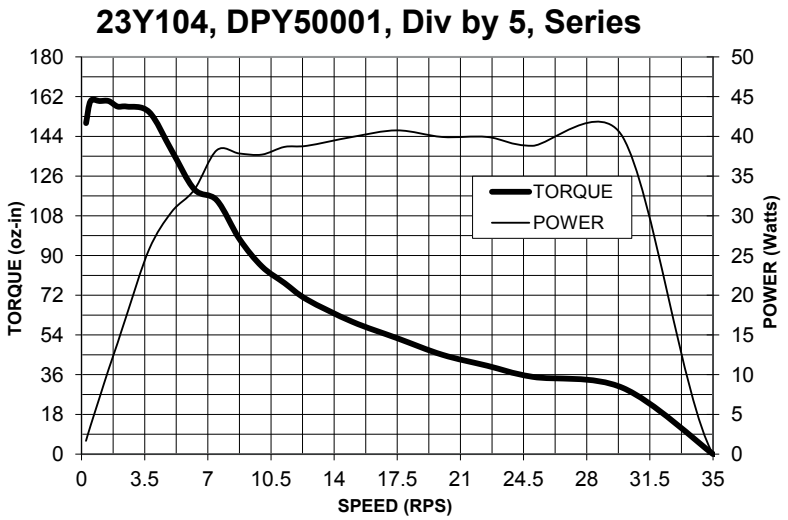

L010879

910 East Orangefair Ln. Anaheim, CA 92801 **Tel. (714) 992-6990** Fax. (714) 992-0471 **www.anaheimautomation.com**

23Y104S-LW8-MS - High Torque Stepper Motor

ANAHEIM AUTOMATION

FEATURES

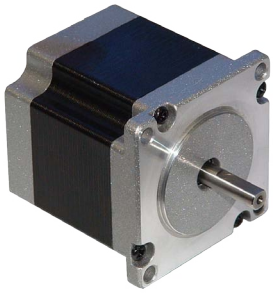

- ***NEMA 23 Frame Size***
- ***Holding Torque - 175 oz-in***
- ***1.8° Step Angle***
- ***High Step Accuracy and Resolution***
- ***Low Vibration and Noise***
- ***CE Certified RoHS Compliant***

The 23Y104S-LW8-MS High Torque Stepper Motor offers a great value without sacrificing quality. This motor was designed to offer the highest possible torque while minimizing vibration and audible noise. It is wired in series with a Molex 4 pin Mini-Fit Jr. receptacle.

A 10 ft. 4 conductor, 20 AWG cable with mating 4 pin Mini-Fit Jr. plug is included in the PKG-231-DPY50-CBL stepper motor/driver package.

SPECIFICATIONS

Model #	NEMA Size	Holding Torque (oz-in)	Bipolar Current (A)	Bipolar Voltage (v)	Bipolar Resistance (ohms)	Bipolar Inductance (mH)	Rotor Inertia (oz-in-sec^2)	Shaft Diameter (in)	Weight (lbs)	Length (in)
23Y104S-LW8-MS	23	175	1.4	5.0	3.6	12.0	0.0042	0.25	1.55	2.204

Step Angle Accuracy:	± 5% (Full Step, No Load)	Insulation Resistance:	100M Ohm Min, 500VDC
Resistance Accuracy:	± 10%	Dielectric Strength:	500VDC for 1 minute
Inductance Accuracy:	± 20%	Shaft Radial Play:	0.02” Max (1.0 lbs)
Temperature Rise:	80°C Max (2 Phases On)	End Play:	0.08” Max (1.0 lbs)
Ambient Temperature:	-20° to +50° C	Max Radial Force:	16.3 lbs
Insulation Type:	Class B	Max Axial Force:	2.2 lbs-Force

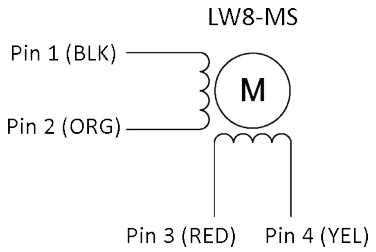

Pin #	Lead Wire Connection	Lead Wire Color
1	Phase 1 (A)	Black
2	Phase 3 (A\)	Orange
3	Phase 2 (B)	Red
4	Phase 4 (B\)	Yellow
	Soldered Together	White/Black & White/Orange
	Soldered Together	White/Red & White/Yellow

910 East Orangefair Ln. Anaheim, CA 92801 **Tel. (714) 992-6990** Fax. (714) 992-0471 **www.anaheimautomation.com**

DPY50001 - 5Amp Stepper Driver Pack

DPY50001 Microstep Driver Features

- Size (8.25”L x 5.05”W x 3.47”H)
- Output Current 5.0 Amps Peak
- 200 to 12,800 steps/rev (1,2,5,8,10,16,32 and 64 selectable step operations)
- Short Circuit Protection
- No Minimum Inductance
- Optical Isolation
- Motor ON/OFF input

Introduction

The DPY50001 is a single-axis 5A bipolar microstep motor driver and a 125W power supply enclosed in a package.The DPY50001’s microstep driver has an output current capability of 0.5 Amps minimum to 5.0 Amps maximum (Peak Rating). The inputs are optically isolated with a minimum sourcing of 1.0mA per input (+3.5VDC minimum to +24VDC maximum). The clock input is set to receive either positive or negative edge clocks with a maximum frequency of 400kHz. The driver offers direction control and motor current ON/OFF capabilities. The Reduce Current Enabled automatically reduces motor current to 50% of set value after the last step is made (20msec delay). The driver has built-in features to indicate power on (Green LED), a fault condition (Red LED) and clocks being received. (Yellow LED)

With the DPY50001, various step resolutions can be implemented by the onboard dip switch. These divisions range from 200 steps per revolution to 12,800 steps per revolution. The bipolar drive configuration handles 4, 6, and 8 lead motors. Protection devices have been added to this driver for *Phase to Phase Short-Circuit and Motor Miss-Wire* conditions.

Pin Descriptions

The inputs on the DPY50001 are optically isolated with the anode (+) and cathode (-) both brought out to the user. With no current going through the opto-diode the input is considered high. To enable the input a minimum of 1.0mA needs to be sourced or sinked through the opto-diode. This is done simply by placing a voltage of +3.5 to +24 VDC across the two inputs of the opto-diode. If sourcing current in to the inputs, then all three cathodes (-) should be tied together and grounded. If sinking current, then all three anodes (+) should be tied together to the +voltage as shown in theTYPICAL APPLICATION HOOK-UP.

Optically Isolated Inputs

The following inputs to the DPY50001 are Optically Isolated.

Item	Pin #
Clock	1 & 2
Direction	3 & 4
On/Off	5 & 6

To enable an input, apply a DC voltage source of +5VDC to +24VDC across the inputs. The Anodes (+) are pins 1,3,and 5 and the Cathodes (-) are pins 2, 4, and 6.

TB1: 6 Pin Terminal Description

Pin #	Description
1	**Step Clock Input Anode (+):** A positive going edge on this isolated input advances the motor one increment. The size of the increment is dependent on the Microstep Select Inputs of Switch 1.
2	**Step Clock Input Cathode (-)**
3	**Direction Anode (+):** This isolated input is used to change the direction of the motor. Physical direction also depends on the connection of the motor windings.
4	**Direction Cathode (-)**
5	**ON/OFF Anode (+):** This isolated input is used to enable and disable the output section of the driver. When HIGH (open) the outputs are enabled. However, this input does not inhibit the step clock.
6	**ON/OFF Cathode (-)**

TB2: 5 Pin Terminal Description

Pin #	Description
1	**Phase A:** Phase 1 of the step motor
2	**Phase A:** Phase 3 of the step motor
3	**Phase B:** Phase 2 of the step motor
4	**Phase B:** Phase 4 of the step motor
5	**Motor Ground**

Absolute Maximum Ratings

Input Voltage: 130VAC, 50/60Hz
Output Current: 5.0 AMPS PEAK
Max Plate Temperature: 70° C
Storage Temperature: 0° to +50° C
Input Voltage (For isolated inputs): +3.5V to +24V

Electrical Specifications

Item	Min	Typ	Max	Units
Input Operating Voltage	105	115	130	VAC
Phase Output Current	0.4		3.5	A (RMS)
Phase Output Current	0.5		5.0	A (PEAK)
Clock Frequency	0		400	kHz
Chopping Frequency	28	30	32	kHz
Input Signal Voltage	3.5		24	V
Operation Temperature	0		70	C
Storage Temperature	0		50	C

TYPICAL APPLICATION HOOK-UP

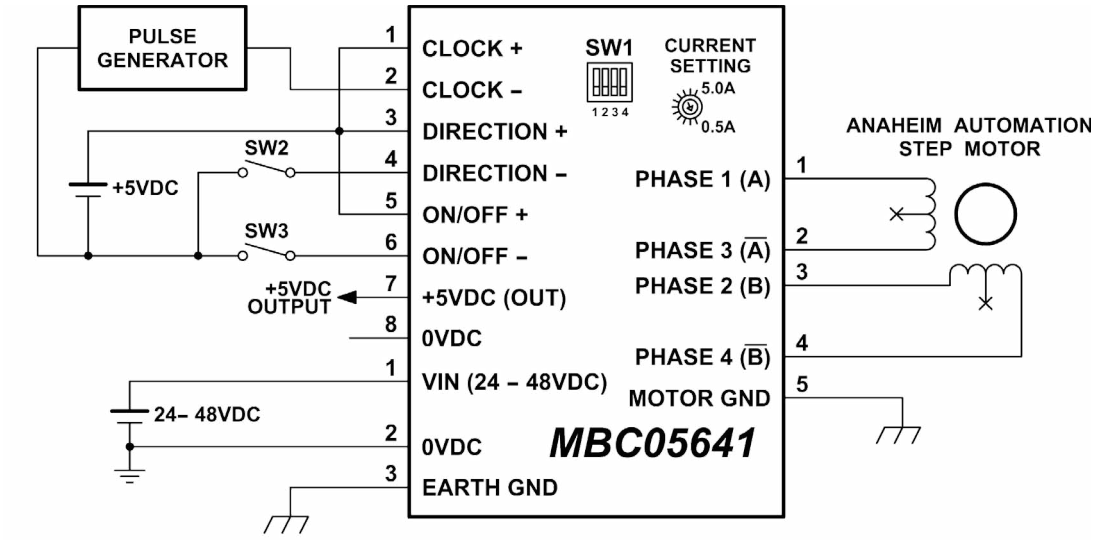

Sinking

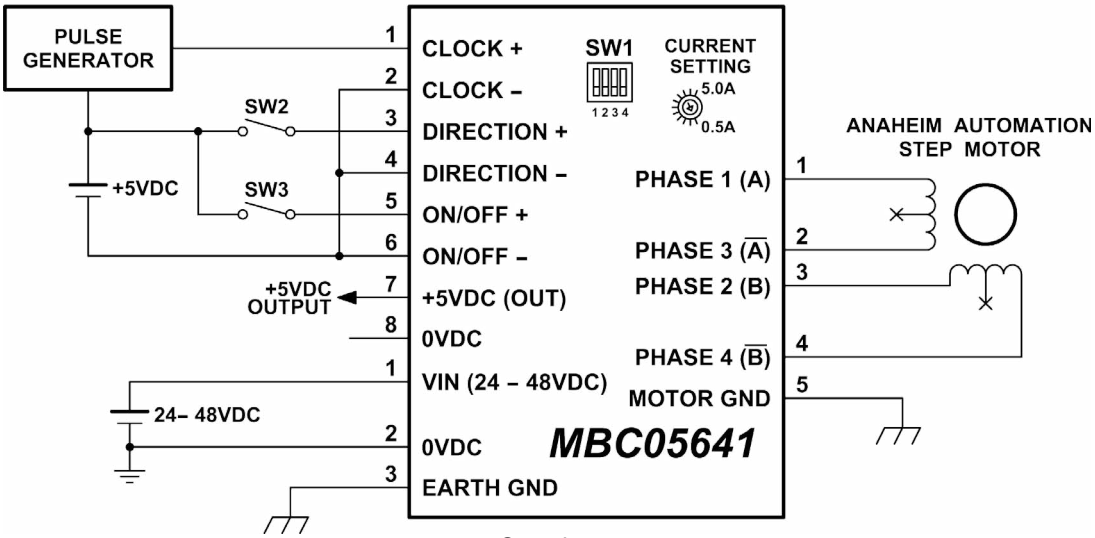

Sourcing

Setting the Output Current

The output current on the DPY50001 is set by an onboard potentiometer. This potentiometer determines the per phase peak output current of the driver. **The specified motor current of 1.4A for the 23Y104S-LW8-MS (which is the bipolar value) is multiplied by a factor of 1.4 to determine the current adjustment potentiometer value of 2.0Amps or 40%.**

Peak Current	Potentiometer Setting	Peak Current	Potentiometer Setting
0.5A	0%	3.0A	60%
0.6A	10%	3.5A	70%
0.9A	20%	4.0A	80%
1.5A	30%	4.5A	90%
2.0A	40%	5.0A	100%
2.5A	50%	--	--

Reducing Output Current

Reducing the output current is accomplished by setting switch 1 of the DIP switch to the ON position and occurs approximately 20mSec after the last positive going edge of the step clock input. The amount of current per phase in the reduction mode is approximately 70% of the set current. When the current reduction circuit is activated, the current reduction resistor is paralleled with the current adjustment potentiometer. This lowers the total resistance value, and thus lowers the per phase output current.

Microstep Selection (DIP Settings)

Switches 2, 3 and 4, of the DIP switch select the number of microsteps per step. The table below shows the standard resolution values along with the associated positions for the select switches. The standard waveforms are sinusoidal.

Resolution	Steps/Rev	Position 2	Position 3	Position 4
1	200	ON	ON	ON
2	400	ON	ON	OFF
5	1000	ON	OFF	ON
8	1600	ON	OFF	OFF
10	200	OFF	ON	ON
16	3200	OFF	ON	OFF
32	6400	OFF	OFF	ON
64	12,800	OFF	OFF	OFF

Connecting the Step Motor

Phase 1 and Phase 3 of the step motor are connected to pins 1 and 2 on connector TB2. Phase 2 and Phase 4 of the step motor are connected to pins 3 and 4 on connector TB2. The motors case can be grounded to pin 5 on connector TB2. Refer to TYPICAL APPLICATION HOOK-UP.

NOTE: The physical direction of the motor with respect to the direction input will depend on the connection of the motor windings. To reverse the direction of the motor with respect to the direction input, switch the wires on Phase 1 and Phase 3.

WARNING: Do not connect or disconnect motor wires while power is applied!

Short-Circuit, Mis-Wire, and Over-Current Conditions

If it is found that there is a condition that causes on over current in the driver phase transistors, the Red LED will turn on solid and power will be shut off to the motor. To reset the drive turn power off, check wiring, and turn power back on.